Operating instructions

Refrigerator with explosion-proof interior container

Read the operating instructions before switching on for the first time

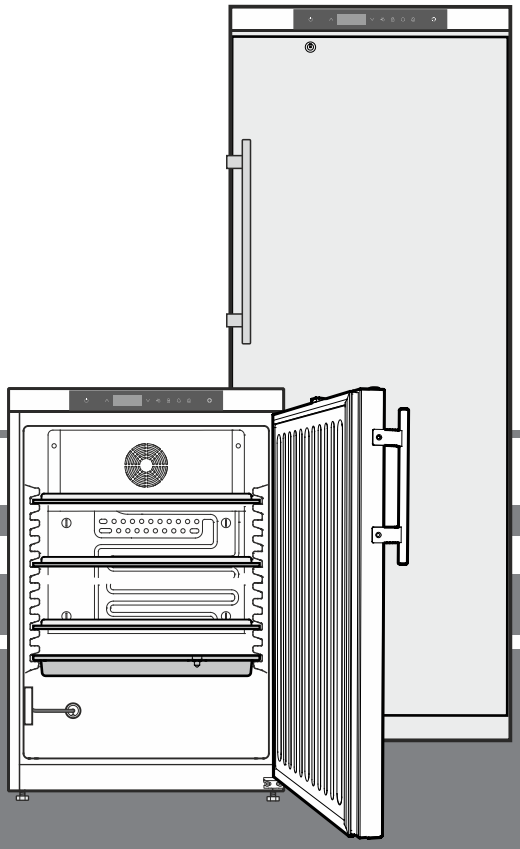

7085 479-00

LKexv

LIEBHERR

Inhalt

Disposal notes 14
Description of the appliance 14
Safety instructions and warnings 15
Range of appliance use 16
Climate rating 16
Setting up 16
Appliance dimensions 16
Electrical connection 16
Operating and control elements 17
Switching the appliance on and off 17
Setting the temperature 17
Temperatur display mode 17
Door open alarm 18
Setting the delay time for the door open alarm 18
Audible warning signal settings 18
Deactivating the audible warning signal function 18
Alarm test 18
Alarm messages 19
Adjusting the alarm parameters 19
Calling up stored alarm events and reading the temperature progression 19
Resetting the stored alarm events HAn 19
Resetting the recorded temperature progression rt 19
Example of an alarm query 20
Calibrating the control sensor 20
Product sensor 20
Calibrating the product sensor 20
Switching the temperature display between control sensor and product sensor 21
Keypad lock 21
Setting the real time clock 21
Conversion from summer to winter time 22
Enabling/disabling automatic conversion from summer to winter time 22
Changing the network address 22
Resetting the parameters to factory settings 22
Safety lock 22
Defrosting 22
Setting the display indication for the defrost phase 22
Cleaning 23
Malfunctions 23
Possible error messages in the display 23
Shutting your appliance down 23
External alarm 24
Floating alarm output 24
RS485 interface 24
Changing over door hinges 25
Installation dimensions 25

Disposal notes

The appliance contains reusable materials and should be disposed of properly - not simply with unsorted household refuse. Appliances which are no longer needed must be disposed of in a professional and appropriate way, in accordance with the current local regulations and laws.

When disposing of the appliance, ensure that the refrigerant circuit is not damaged to prevent uncontrolled escape of the refrigerant it contains (data on type plate) and oil.

- Disable the appliance.
- Pull out the mains plug.
- Cut through the connection cable.

⚠ WARNING

Danger of suffocation due to packing material and plastic film!

Do not allow children to play with packaging material.

Take the packaging material to an official collection point.

Description of the appliance

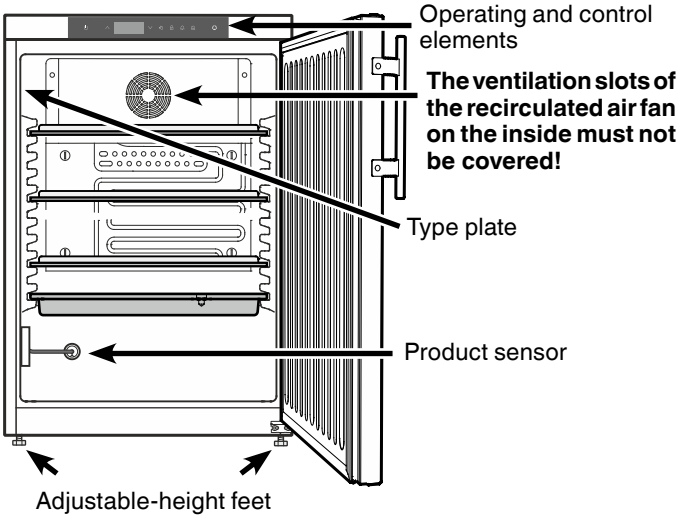

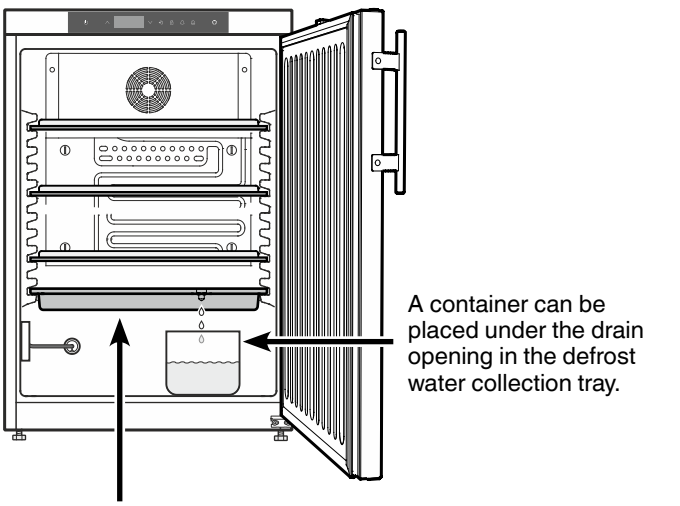

The defrost water collection tray may only be inserted on the lowest support rib.

Safety instructions and warnings

- To prevent injury or damage to the unit, the appliance should be unpacked and set up by two people.
- In the event that the appliance is damaged on delivery, contact the supplier immediately before connecting to the mains.
- To guarantee safe operation, ensure that the appliance is set up and connected as described in these operating instructions.
- Disconnect the appliance from the mains if any fault occurs. Pull out the plug, switch off or remove the fuse.
- When disconnecting the appliance, pull on the plug, not on the cable.
- Any repairs and work on the appliance should only be carried out by the customer service department, as unauthorised work could prove highly dangerous for the user. The same applies to changing the mains power cable.
- Do not allow naked flames or ignition sources to enter the appliance. When transporting and cleaning the appliance, ensure that the refrigerant circuit is not damaged. In the event of damage, make sure that there are no ignition sources nearby and keep the room well ventilated.
- Do not stand on the plinth, drawers or doors or use them to support anything else.
- This appliance can be used by children of 8 years old and over, and also by persons with restricted physical, sensory or mental capacity or lack of experience and knowledge, if they are supervised or have been instructed on safe use of the appliance and understand the resulting risks. Children must not be allowed to play with the appliance. Cleaning and user maintenance must not be carried out by children without supervision.
- Avoid prolonged skin contact with cold surfaces or chilled/frozen food. This could cause pain, numbness and frostbite. In the case of prolonged skin contact, protective measures should be taken, e.g. gloves should be worn.
- Do not consume food which has been stored for too long, as it could cause food poisoning.
- Do not use electrical appliances inside the appliance.
- If you have a lockable appliance, do not keep the key near the appliance or within reach of children.
- The appliance is designed for use in enclosed areas. Do not operate the appliance outdoors or in areas where it is exposed to splash water or damp conditions.
- The LED light strip illuminates the interior of the appliance. It is not suitable for lighting a room.
- Do not install the appliance in the immediate vicinity of an air-conditioning unit. The appliance should also not be operated under a wall-mounted air-conditioning unit.
- The appliance is **not** suitable for storing drugs pursuant to DIN 58345.
- The appliance is **not** suitable for storing blood bottles pursuant to DIN 58371.
- In special fields of application which are subject to their own standard, the user is responsible for complying with this standard.

⚠ WARNING

Danger of sparks produced by friction due to dust on the fan blades.

Do not store dusty objects in the appliance.

Clean the ventilation slots on the recirculated air fan every month using a vacuum cleaner.

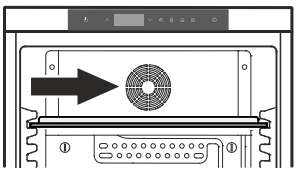

Range of appliance use

The interior, which is free from sources of ignition, is used for storing flammable substances in closed containers and is therefore classified as a Zone 2 hazardous area.

The appliance is **not** suitable for use in explosion-hazard areas.

For the storage of valuable or temperature-sensitive substances or products the use of an independent, constantly monitoring alarm system is necessary.

This alarm system must be designed so that each alarm status is detected immediately by an authorised person who can then take appropriate action.

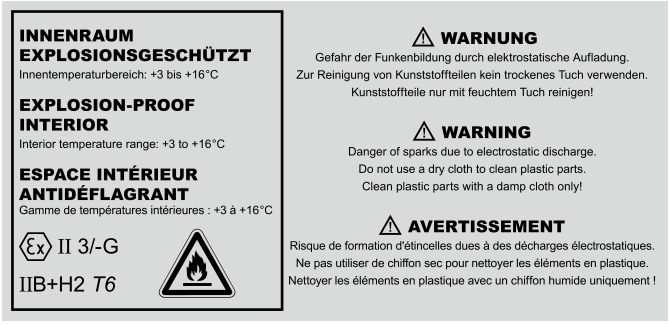

Other features

- Audible and visual temperature alarm (adjustable limits).
- Audible and visual door open alarm.
- Floating contact for connection to a remote monitoring system.
- Serial interface (RS485) for external temperature and alarm documentation.
- Maximum/minimum interior temperatures are stored.
- Last 3 temperature alarms are saved with time, date and duration of alarm.
- Last 3 power cuts are saved with time, date and duration of power cut.
- Opening for installing a reference sensor.
- Safety thermostat to avoid temperatures below +2°C.

It is essential to use these safety facilities to avoid damage to stored items. These facilities must not be deactivated or decommissioned!

Climate rating

The climate rating indicates at what room temperature the appliance may be operated to achieve full cooling capacity and what the maximum humidity level in the area around the appliance may be to ensure that no condensation forms on the exterior housing.

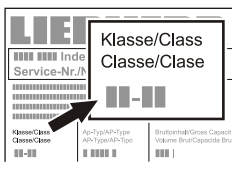

The climate rating is indicated on the type plate.

Climate rating	Max. room temperature	Max. relative humidity
7	35°C	75%

The minimum room temperature at the place of installation is 10°C.

Setting up

- Avoid positioning the appliance in direct sunlight or near cookers, radiators and similar sources of heat.
- The floor on which the appliance stands should be horizontal and level. Compensate for uneven floors with the adjustable feet.
- Do not cover ventilation openings or grille. →

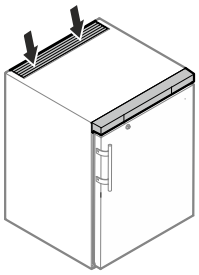

- Standard EN 378 specifies that the room in which you install your appliance must have a volume of 1 m³ per 8 g of R 600a refrigerant used in the appliance, so as to avoid the formation of inflammable gas/air mixtures in the room where the appliance is located in the event of a leak in the refrigerant circuit.

  The quantity of refrigerant used in your appliance is indicated on the type plate on the inside of the appliance.

Appliance dimensions

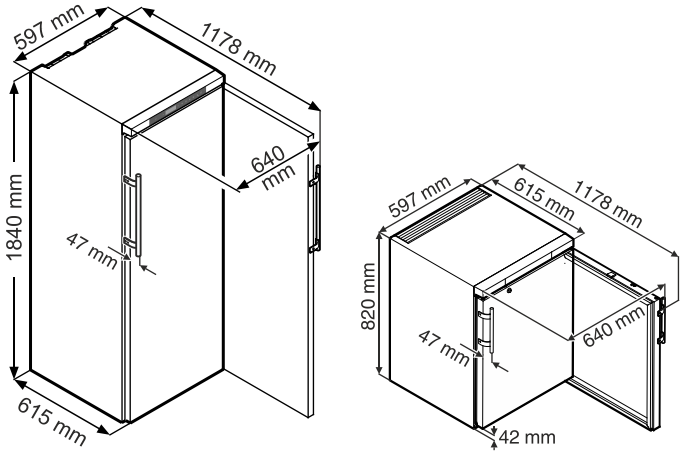

Electrical connection

Only operate the appliance with **alternating current (AC)**.

The permissible voltage and frequency are indicated on the type plate. The position of the type plate is shown in the section entitled **Description of the appliance**.

The socket must be properly earthed and protected by a fuse.

The tripping current of the fuse must be between 10 A and 16 A.

The socket must not be situated behind the appliance and must be easily accessible.

Do not connect the appliance using an extension cable or extension socket.

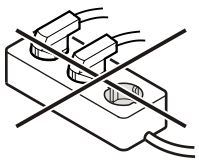

Do not use stand-alone inverters (conversion of direct current to alternating/three-phase current) or energy-saving plugs. Risk of damage to the electronic control system!

Operating and control elements

On/Off button (switching the appliance on and off)

Selection buttons

Defrost button (for manually activating the defrost function)

Keypad lock

Button for calling up stored alarm events

Audible alarm Off button

Enter button

Symbols in the display

Compressor is running

LED flashing - refrigeration unit switches on after a delay. The compressor will start automatically after the pressure in the refrigerant circuit has equalised.

Fan is running

Appliance is defrosting

Temperature display via product sensor is activated

LED flashing and EtC appears in the display. The real time clock must be reset.

The display means that the power supply and interior temperature of the appliance are recorded.

If flashes in the display, there has either been a power failure or the temperature in the appliance exceeded the permissible range.

Alarm function

The appliance has suffered a fault. Contact the customer service department.

Switching the appliance on and off

Connect the appliance to the mains. Display = **OFF**.

Switching the appliance on

Press for approx. 5 seconds. Display = **ON**.

No alarm is displayed or sounded when the appliance is switched on for the first time.

If the appliance is disconnected from the mains for a long time after it has been switched on for the first time and if the temperature inside the appliance rises above the upper alarm limit, this will be detected as a fault by the electronic control system (flashes in the display).

When the appliance is switched on again, this display must be reset as shown below.

Press .

Press + for 5 seconds. Display = rES

The LED will now light up permanently.

Press for 5 seconds.

The electronic control system will switch back to normal operating mode.

Switching the appliance off

Press for approx. 5 seconds. Display = OFF

Setting the temperature

Press for 1 second. The temperature display flashes.

To increase the temperature (warmer): press button .

To reduce the temperature (colder): press button .

Press again.

The desired temperature setting is saved.

Temperatur display mode

The temperature display can be switched between degrees Celsius and degrees Fahrenheit. Factory setting is degrees Celsius.

Press for 5 seconds. Display = rU5

Press . Display = 1

Use button or to select the desired setting.

0 = °C

1 = °F

Press . Display = rU5

Press for 5 seconds.

The electronic control system will switch back to normal operating mode.

Door open alarm

When the door is opened, the LED lights up and the temperature display begins to flash.

When the door has been left open for more than 60 seconds, the LED begins to flash, and door and the temperature indication flash alternately in the display.

The audible warning signal sounds (unless the audible warning signal function has been deactivated).

If the door has to stay open for longer in order to insert items to be cooled, cancel the audible warning signal by pressing button .

Setting the delay time for the door open alarm

The time before the audible warning signal sounds after the door has been opened can be adjusted.

Press for 5 seconds. Display = rS

Press until dSd appears in the display.

Press . Display = 1 Setting range = 1 - 5 minutes.

Use button or to select the desired setting.

Press . Display = dSd

Press for 5 seconds.

The electronic control system will switch back to normal operating mode.

Audible warning signal settings

The audible warning signal will be muted for the current alarm after the button has been pressed. Complete the following steps if you want the audible warning signal to reactivate automatically.

Press for 5 seconds. Display = rS

Press until ASn appears in the display.

Press . Display = 0

Press . Display = 1

Press . Display = ASn

Automatic reactivation of the audible warning signal is now active.

The time before the audible warning signal sounds again must be set.

Press . Display = ASd

Press . Display = 1 Setting range = 1 - 120 minutes.

Use button or to select the desired setting.

Press . Display = ASd

Press for 5 seconds.

The electronic control system will switch back to normal operating mode.

Deactivating the audible warning signal function

The audible warning signal function can be completely deactivated if necessary.

Press for 5 seconds. Display = rS

Press until HY appears in the display.

Press . Display = 0

Use button or to select the desired setting.

0 = audible warning signal function activated

1 = audible warning signal function deactivated

Press . Display = HY

Press for 5 seconds.

The electronic control system will switch back to normal operating mode.

Alarm test

This test checks the function of the internal and any external connected alarm device.

The appliance does not stop its refrigerating function during this test.

Press + for 5 seconds.

- The display will change to a temperature value of 0.2°C below the set upper alarm limit.
- The temperature value will now rise by 0.1°C every 2 seconds.
- When the upper alarm limit is reached, H10 will appear in the display. An external alarm unit connected to the floating alarm output will now be activated.
- The temperature value will continue to rise up to 0.2°C above the upper alarm limit.
- The same process will take place automatically for the lower alarm limit. L10 will appear in the display.

The LED will be lit during the test.

The electronic control system will switch back to normal operating mode.

Cancelling the test prematurely

Press for 5 seconds.

Note

If the values of the upper and lower alarm limit (**AL** and **AH** in the section entitled "**Adjusting the alarm parameters**") are set to **0**, H- - and L- - will appear in the display during this test.

Alarm messages

1. LED flashes in the display

If appears in the display, the appliance has a fault. Consult your nearest customer service point.

2. LED flashes in the display; the display reads HI or LO

The interior is too warm (HI) or too cold (LO).

The audible warning signal sounds (unless the audible warning signal function has been deactivated).

Note
The alarm parameters can be adjusted. See **Adjusting the alarm parameters**.

3. HA / HF / flashes in the display

There has been a power cut (**HF**) of some length or the interior was too warm or too cold (**HA**) during a certain period of time.

Up to three alarm events can be stored and called up.

Adjusting the alarm parameters

The alarm limits (difference to the set temperature) and the alarm delay (delay until alarm sounds) can be adjusted.

Press for 5 seconds. Display = rS

Press until AL appears in the display.

AL = Lower alarm limit

Press . Display = temperature difference in °C

Use button or to select the desired setting.

Set positive values only.

Press . Display = AL

Press . Display = AH Upper alarm limit

Press . Display = temperature difference in °C

Use button or to select the desired setting.

Set positive values only.

Press . Display = AH

Press . Display = Ad

Press . Display = alarm delay in minutes

Use button or to select the desired setting.

Press . Display = Ad

Press for 5 seconds.

The electronic control system will switch back to normal operating mode.

Calling up stored alarm events and reading the temperature progression

Press . Display = HAn

Scroll through the list using or .

HAn	Number of temperature alarms
HA	Last temperature alarm
HA1	Last temperature alarm but one
HA2	Temperature alarm before HA1
HFn	Number of power cuts
HF	Last power cut
HF1	Last power cut but one
HF2	Power cut before HF1
rt	Period in hours in which the maximum and minimum interior temperatures were measured
rH	Maximum (highest) measured temperature
rL	Lowest measured temperature

Select the required item using the button. Press this button again to return to the list.

You can exit the menu at any time by pressing for 5 seconds.

If no button is pressed within 60 seconds, the electronic control system switches back automatically.

Resetting the stored alarm events HAn

Press . Display = HAn

Press + for 5 seconds. Display = rES.

Press for 5 seconds.

The electronic control system will switch back to normal operating mode.

Resetting the recorded temperature progression rt

Press . Display = HAn

Press the button or until rt appears in the display.

Press . Display = 0 - 999

Press for 5 seconds. Display = rES.

The values for rH and rL (highest and lowest measured interior temperature) are then reset to the current interior temperature.

Press for 5 seconds.

The electronic control system will switch back to normal operating mode.

Example of an alarm query

Situation: HA/HF/HACCP flashes in the display.

Press LOG. Display= HAn

Press ⚙. Display = 0

There has not been an alarm status with a too high or too low temperature. You must switch to display HFn.

Press ⚙. Display = HAn

Press ∧ until HF n appears in the display.

Press ⚙. Display = 1 power failure has occurred.

Press ⚙. Display = HF n

Press ∧. Display = HF Last power failure.

Press ⚙. Display = y00 (year)

Press ∧. Display = n00 (month 1-12)

Press ∧. Display = d00 (day 1-31)

Press ∧. Display = h00 (hour 0-23)

Press ∧. Display = n00 (minute 0-59)

Press ∧. Display = t 00 (period of time in hours)

Press LOG + ∧ for 5 seconds. Display = r t S

The **HACCP** LED will now light up permanently.

HA/**HF** is cancelled in the display.

The electronic control system is now ready for the next alarm.

Press 🔕 for 5 seconds.

The electronic control system will switch back to normal operating mode.

Calibrating the control sensor (standard sensor for temperature control)

Possible tolerances of the control sensor (the displayed temperature compared to the actual interior temperature) can be offset with this function.

Press 🔕 for 5 seconds. Display = r 1 S

Press ∧ until r 1 c 1 appears in the display.

Press ⚙. Display = correction value set at the factory

Use button ∨ or ∧ to increase or decrease the correction value in 0.1°C increments.

Press ⚙. Display = actual (corrected) interior temperature

Press ⚙. Display = r 1 c 1

Press 🔕 for 5 seconds.

The electronic control system will switch back to normal operating mode.

Product sensor

The product sensor in the bottom area of the appliance interior is an additional sensor for temperature indication.

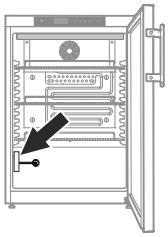

Calibrating the product sensor

Possible tolerances of the product sensor (the set temperature compared to the actual interior temperature) can be offset with this function.

Press 🔕 for 5 seconds. Display = r 1 S

Press ∧ until r 1 c 3 appears in the display.

Press ⚙. Display = 0.0

Use button ∨ or ∧ to increase or decrease the correction value in 0.1°C increments.

Press ⚙. Display = actual (corrected) product sensor temperature

Press ⚙. Display = r 1 c 3

Press 🔕 for 5 seconds.

The electronic control system will switch back to normal operating mode.

Switching the temperature display between control sensor and product sensor

Press for 5 seconds. Display = rS

Press ∧ until rtI appears in the display.

Press . Display = I (control sensor)

Press ∧. Display = 2 (product sensor)

If the product sensor is activated, AUX appears in the display.

Press . Display = rS

Press for 5 seconds.

The electronic control system will switch back to normal operating mode.

Keypad lock

The keypad lock ensures that no unintentional changes are made to the electronic control system.

Setting a PIN code for the keypad lock function

Press for 5 seconds. Display = rS

Press ∨ until PI appears in the display.

Press . Display = 0

Use button ∨ or ∧ to choose a PIN code between 1 and 999.

Press . Display = PI

Press for 5 seconds.

The electronic control system will switch back to normal operating mode.

Activating the keypad lock

Press for 5 seconds. Display = 0

Use button ∨ or ∧ to select the PIN code.

Press . Display = Loc

All buttons except and are locked.

If an incorrect PIN code is entered, the electronic control system switches back to normal operation without activating the keypad lock.

Deactivating the keypad lock

Press for 5 seconds. Display = I

Use button ∨ or ∧ to select the PIN code.

Press . Display = unl

All functions are enabled.

If an incorrect PIN code is entered, the keypad lock remains active.

Setting the real time clock

The real time clock is preset (CET). For a different time zone, the time must be adjusted manuall.

Press for 5 seconds. Display = rS

Press ∨. Display = tc

Press . Display = y00 (year)

Press . Display = 00

Set the year by pressing the ∨ ∧ buttons.

Press .

Press ∧. Display = M00 (month 1-12)

Press . Display = 00

Set the month by pressing the ∨ ∧ buttons.

Press .

Press ∧. Display = d00 (day 1-31)

Press . Display = 00

Set the day by pressing the ∨ ∧ buttons.

Press .

Press ∧. Display = u00 (days of the week)
(1 = Monday, 7 = Sunday)

Press . Display = 00

Set the day of the week by pressing the ∨ ∧ buttons.

Press .

Press ∧. Display = h00 (hour 0-23)

Press . Display = 00

Set the hour by pressing the ∨ ∧ buttons.

Press .

Press ∧. Display = n00 (minute 0-59)

Press . Display = 00

Set the minutes by pressing the ∨ ∧ buttons.

Press .

Press for 5 seconds.

The electronic control system will switch back to normal operating mode.

When Etc appears in the display, the real time clock must be reset.

Conversion from summer to winter time

Conversion to summer time is carried out automatically by the electronic control system on the last Sunday in March at 2 o'clock in the morning.

Conversion to winter time is carried out automatically by the electronic control system on the last Sunday in October at 2 o'clock in the morning.

In order to enable the new time, the appliance must be switched off and on after each of the times specified above.

Enabling/disabling automatic conversion from summer to winter time

Press 🔔 for 5 seconds. Display = rJ5

Press ∨ until dSE appears in the display.

Press ⚙. Display = 1

Use button ∨ or ∧ to select the desired setting.

0 = deactivated

1 = activated

Press ⚙. Display = dSE

Press 🔔 for 5 seconds.

The electronic control system will switch back to normal operating mode.

Changing the network address

When connecting several appliances via the RS485 interface, each appliance must have its own network address.

Press 🔔 for 5 seconds. Display = rJ5

Press ∨ until H0 appears in the display.

Press ⚙. Display = 1

Use button ∨ or ∧ to change the network address (1-207).

Press ⚙. Display = H0

Press 🔔 for 5 seconds.

The electronic control system will switch back to normal operating mode.

Resetting the parameters to factory settings

The alarm limits and sensor calibration values can be reset to the factory settings using this function.

Pull out the mains plug.

Keep 🔔 pressed and connect the mains plug.

Display = bn1

Press ⚙. Display = StD

The electronic control system will switch back to normal operating mode.

Safety lock

The lock in the appliance door is equipped with a safety mechanism.

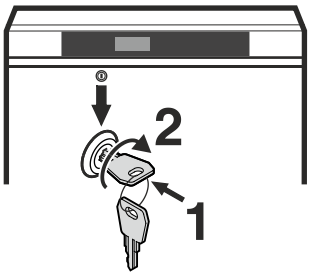

Locking the appliance

- Insert the key as shown by arrow **1**.
- Turn the key 90°.

To unlock the appliance, the same procedure must be repeated in the same order.

Defrosting

The appliance defrosts automatically. The defrost water drains into a tray situated below the evaporator.

This tray must be emptied from time to time.

Pull the tray out towards you and empty.

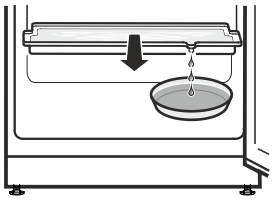

To avoid having to empty the defrost water collection tray frequently, you can place a container under the drain opening in the tray.

The defrost water collection tray may only be inserted on the lowest support rib.

Setting the display indication for the defrost phase

Press 🔔 for 5 seconds. Display = rJ5

Press ∧ until dd appears in the display.

Press ⚙. Display = 1

Use button ∨ or ∧ to select the desired setting.

0 = Symbol ❄ + alternating display of dEF and the current temperature in the interior of the appliance.

1 = Symbol ❄ + temperature before the start of the defrost phase.

2 = Symbol ❄ + dEF.

Press ⚙. Display = dd

Press 🔔 for 5 seconds.

The electronic control system will switch back to normal operating mode.

Activating the defrost function manually

If the door has been left slightly open for a long time, a layer of ice may form in the interior and on the cooling plate. The defrost function can then be activated manually.

Press ✱ for 3 seconds. Display = ❄ + dFb

The electronic control system will automatically switch back to normal operating mode.

Display = dFE

Cleaning

Before cleaning always switch off the appliance. Pull out the mains plug or switch off or unscrew the fuse.

- Clean the inside, equipment and outer walls with lukewarm water and a little detergent. Do not use abrasive or acid cleaners or chemical solvents.

Do not use steam cleaners because of the risk of injury and damage.

- Ensure that no cleaning water penetrates into the electrical components or ventilation grille.
- The dust should be removed from the refrigeration unit and heat exchanger - metal grid at the back of the appliance - once a year.
- Do not damage or remove the type plate on the inside of the appliance. It is very important for servicing purposes.

Notice!

Only clean plastic parts with a damp cloth! Risk of electrostatic discharge.

Malfunctions

You may be able to rectify the following faults by checking the possible causes yourself:

- **Appliance does not function:**

– Is the appliance switched on?
– Is the plug correctly fitted in the mains socket?
– Is the fuse intact?

- **Loud running noise:**

– Is the appliance set up firmly on the floor?
– Does the compressor cause nearby items of furniture or objects to vibrate? Please note that noises caused by the refrigerant circuit cannot be avoided.

- **The temperature is not low enough:**

– Is the temperature setting correct (see "Setting the temperature")?
– Does the separately installed thermometer show the correct reading?
– Is the ventilation system working properly?
– Is the appliance set up too close to a heat source?

If none of the above causes apply and you cannot rectify the fault yourself, contact the nearest customer service department stating the type designation ①, service number ② and appliance number ③ as indicated on the type plate.

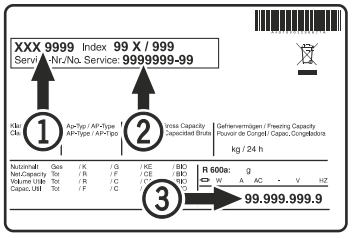

The position of the type plate is shown in the section entitled **Description of the appliance**.

Possible error messages in the display

Error code	Error	Action
E0, E1, E2, rE	Temperature sensor defective	Contact the customer service department
EE, EF	Electronic control system error	Contact the customer service department
dOr	Appliance door open for too long	Close appliance door
HI	Temperature inside appliance too high (too warm)	Check that the door has been closed properly. If the temperature does not drop, contact the customer service department.
LO	Temperature inside appliance too low (too cold)	Contact the customer service department
Etc		Reset the real time clock (see "Setting the real time clock")
HF, HA	There has been a power cut of some length or the interior was too warm or too cold during a certain period of time.	See **Calling up stored alarm events and reading the temperature progression**
AFr	Temperature around the product sensor < 0°C	Contact the customer service department

Shutting your appliance down

If your appliance is to be shut down for any length of time, switch it off and disconnect the plug or switch off or unscrew the fuse.

Clean the appliance and leave the door open in order to prevent unpleasant smells.

The appliance complies with the relevant safety regulations and EU Directives 2014/30/EU and 2014/35/EU.

External alarm

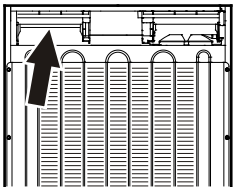

We recommend connecting the appliance to an external alarm device.

There are various connection options at the back of the appliance.

The appliance may only be connected to an external alarm device by trained personnel.

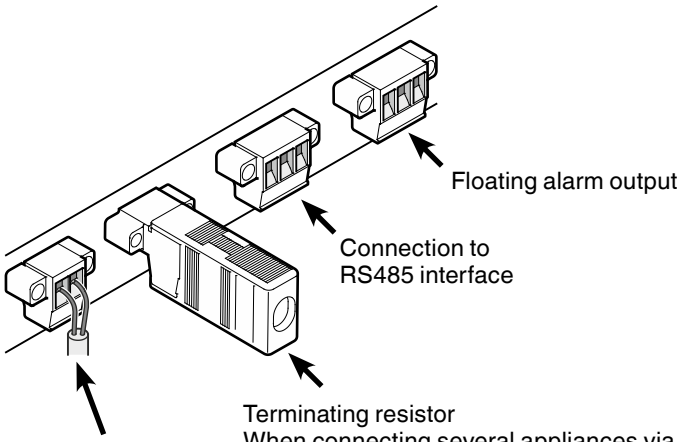

Note
The connectors are secured with screws. To remove the connectors, undo the left and right screws.

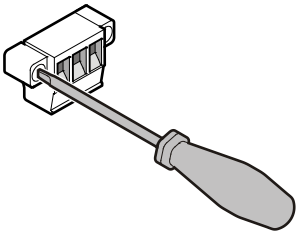

Floating alarm output

These three contacts can be used to connect the appliance to an optical or acoustic alarm device.

The connection is designed for a maximum of **42 V/8 A DC** from a safety extra-low voltage (SELV) source (**minimum current: 150 mA**).

Notice

When supplying mains voltage to the floating alarm contact, the technical safety requirements of standard EN 60335 will not be satisfied.

N.O

Alarm output

Connection for a visual warning light or an acoustic alarm signal.

N.C

Operating light
Connection for a control lamp to indicate that the appliance is in normal mode.

COM

External power supply unit
42 V/8 A DC maximum
Minimum current: 150 mA

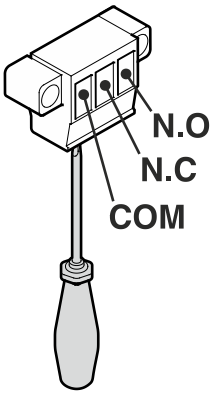

RS485 interface

Rx- / Tx-

Send/Receive data cable (negative pole)

Rx+ / Tx+

Send/Receive data cable (positive pole)

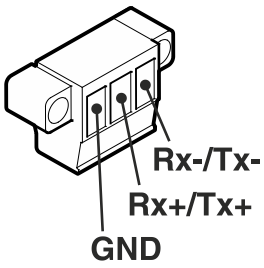

GND

Earth cable

Changing over door hinges

1. Unscrew the hinge bracket.

Notice: the door mounting has a spring mechanism enabling the door to close by itself. The hinge bracket turns to the left when the screws are undone.

2. Pull the door out at the bottom and lift off.

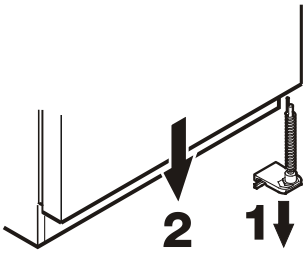

3. Screw on the handle.
The handle and screws are supplied in the accessory pack.

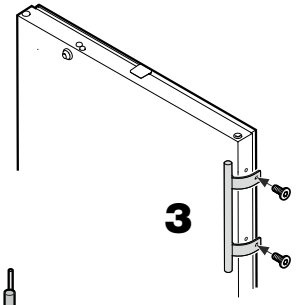

4. Transfer pin on hinge bracket to the opposite side.

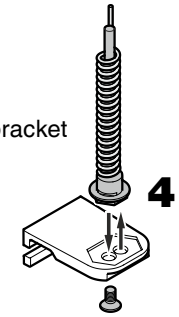

5. Transfer upper hinge components to the opposite side.

6. Transfer covers to the opposite side.

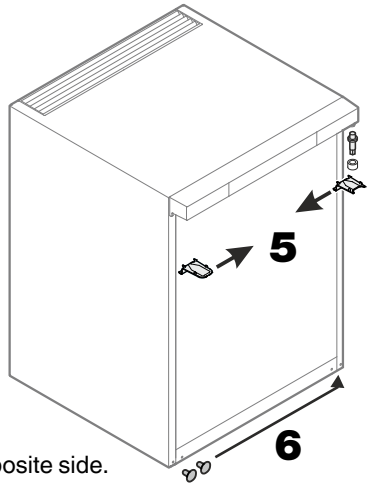

7. Mount door on hinge pin and close.

8. Insert hinge bracket in lower door mounting. Turn hinge bracket by 90° - spring is compressed. Screw on hinge bracket.

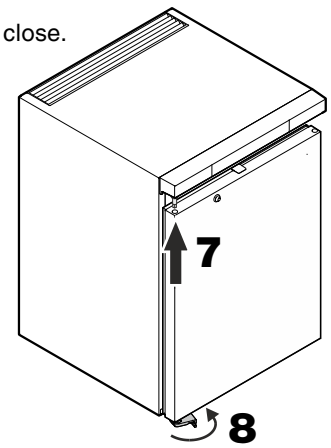

Installation dimensions (mm)

Version 1

A cross-section of min. 200 cm² is required in the worktop for ventilation of the rear of the appliance.

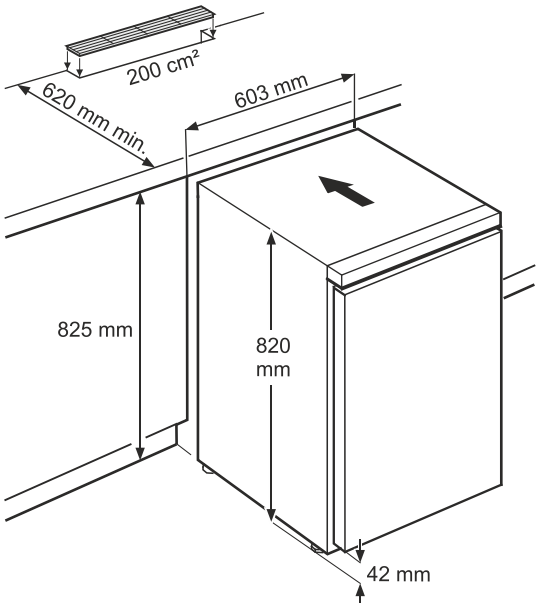

Version 2
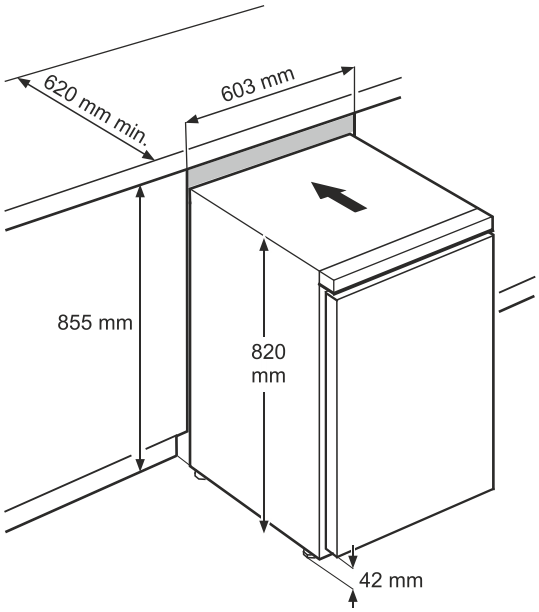
If no ventilation grille is provided in the worktop, the recess must be at least 860 mm high to ensure adequate heat dissipation to the front.